LCC Pico Turntable Node User Guide

Version 2.7

This version utilizes the MCP2815 and MCP2562 discrete components for the LCC interface.

The intent of this node is to control all aspects of a turntable on a model railroad layout. It can also produce events to control other LCC actions such as servo activated roundhouse doors or lighting. It may also be adapted to several other uses by connecting to exposed pins on the Raspberry Pi Pico microcontroller.

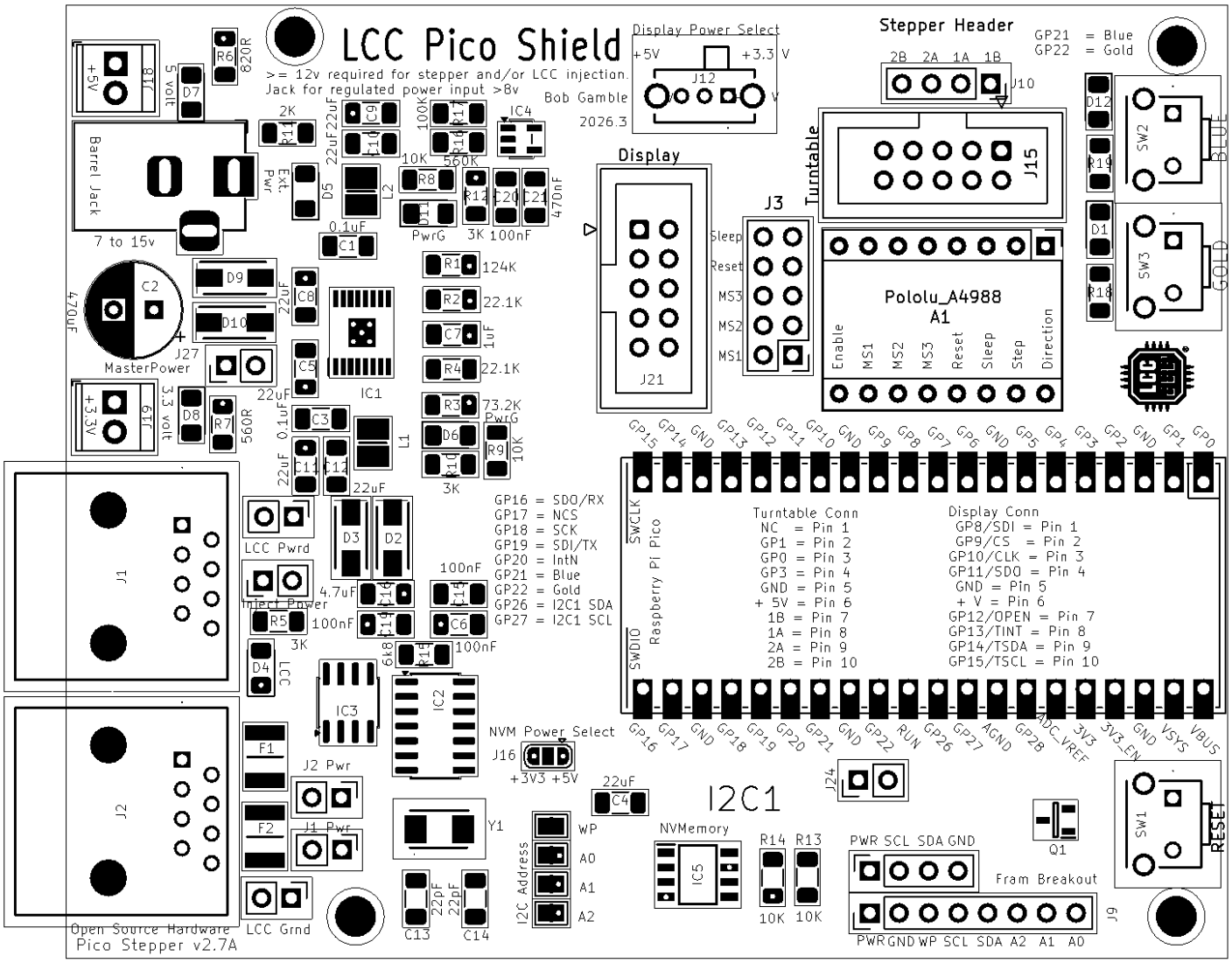

The node may be powered from the barrel jack or the LCC port. If driving a stepper motor power must be applied from the barrel jack. In this case the external power must be suitable for the motor and stepper controller. The barrel jack power should be at least seven (8) volts to power the node or fifteen (15) volts if using the node to inject power to LCC. Amperage should be sufficient to drive any external devices plus about half an amp for the node plus another 1.5 amps if injecting power to LCC.

Node power configuration is accomplished with five jumpers located behind the LCC ports.

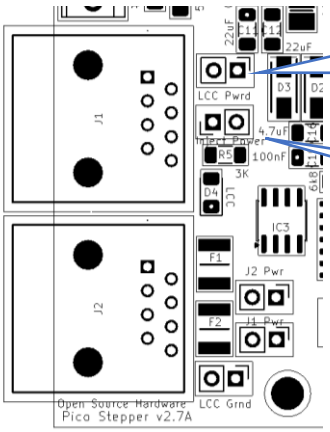

LCC Pwrd jumper should be bridged along with the LCC Grnd jumper if the node is to be powered from the LCC Port. Note that this will not provide power to the stepper driver which is powered exclusively from the barrel jack.

Inject Power should be bridged along with the LCC Grnd jumper if the node is intended to inject power to one or both of the LCC ports. 15 volts of at least 1.5 amps should be applied to the barrel jack in order to inject power.

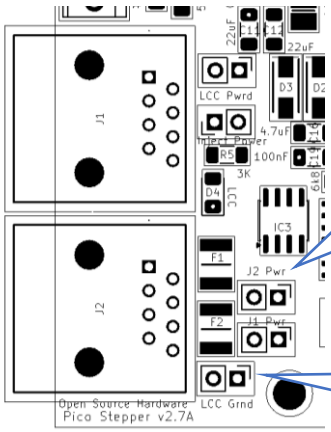

J1 Pwr and J2 Pwr jumpers allow power isolation of one or both LCC ports. Generally, both jumpers would be bridged. If power injection or utilization was only desired in one direction, then the opposing jumper would be opened to isolate that leg. The isolated leg should be powered downstream as opening the jumper will cut off any power from the node.

LCC Grnd jumper should be bridged if the node is intended to inject power to or draw power from one or both of the LCC ports.

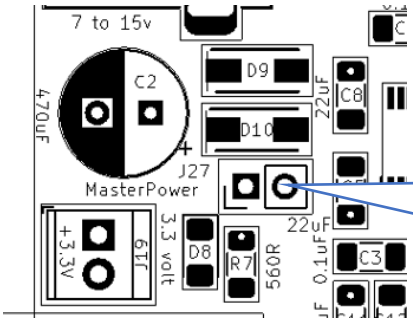

Master Power jumper should be bridged to power the node. A normally closed button may be wired to this jumper to create a master power reset.

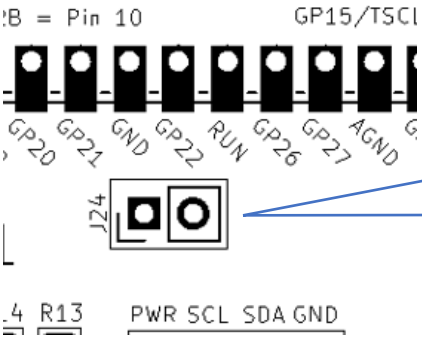

Jumper 24 is in parallel with the reset button and may be used to wire to a normally open button as a remote Pico reset.

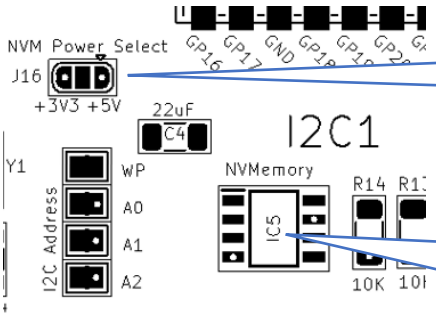

The power applied to the I2C nonvolatile memory may be selected by bridging the power selection jumper.

I2C nonvolatile memory may be populated if desired to reduce strain on the Pico flash. Parts compatible with these should work.

BR24G512F-3AGTE2 I2C BUS(2-Wre) 512K

MB85RC256VPF-G-BCERE1 256kbit FRAM with I2

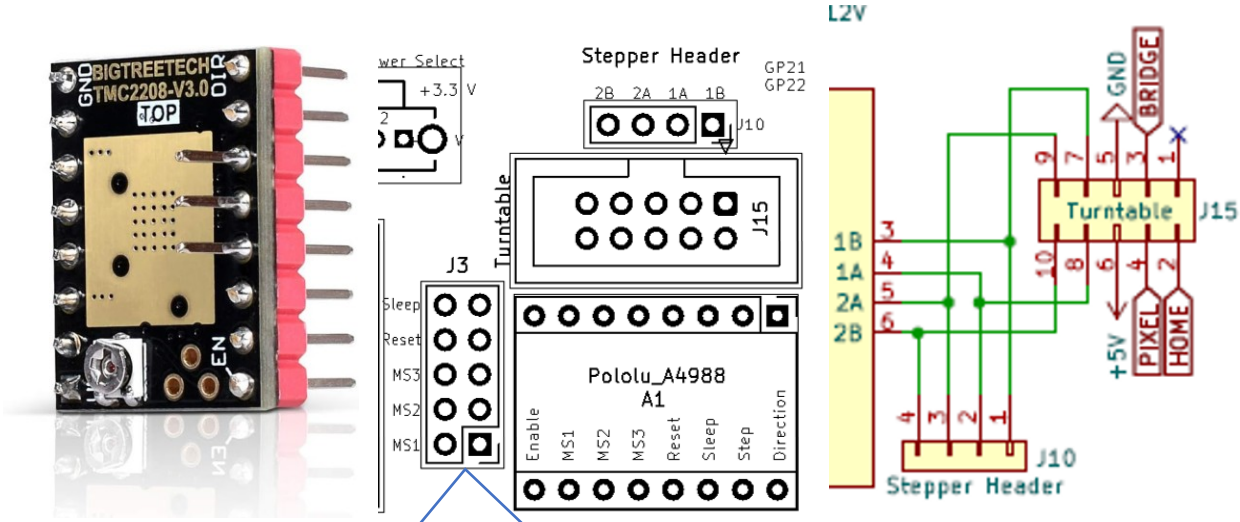

The stepper motor driver, if populated, can be configured with these jumpers. Bigtreetech TMC2208 V3.0 UART Stepper with Heat Sink has worked well for me as a replacement for a A4988

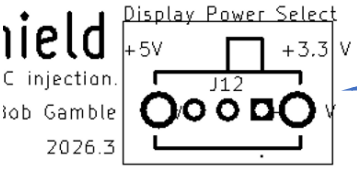

The voltage for pin 6 of the IDC connector may be selected to be either 3.3 or 5 volts.

The pinout of the connector is as below.

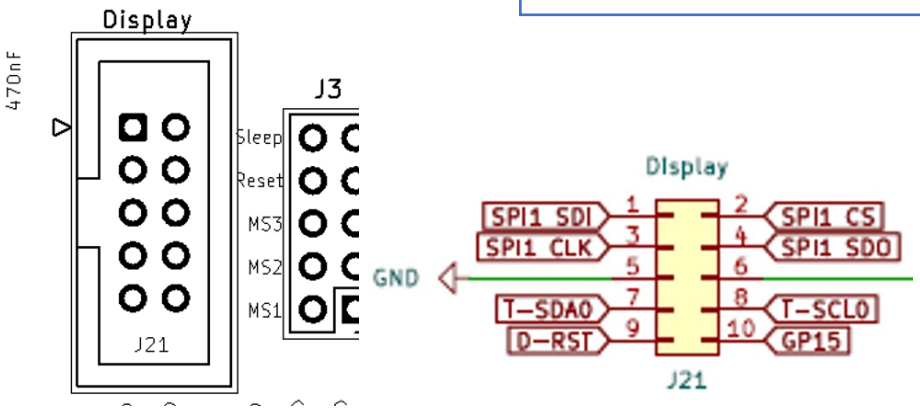

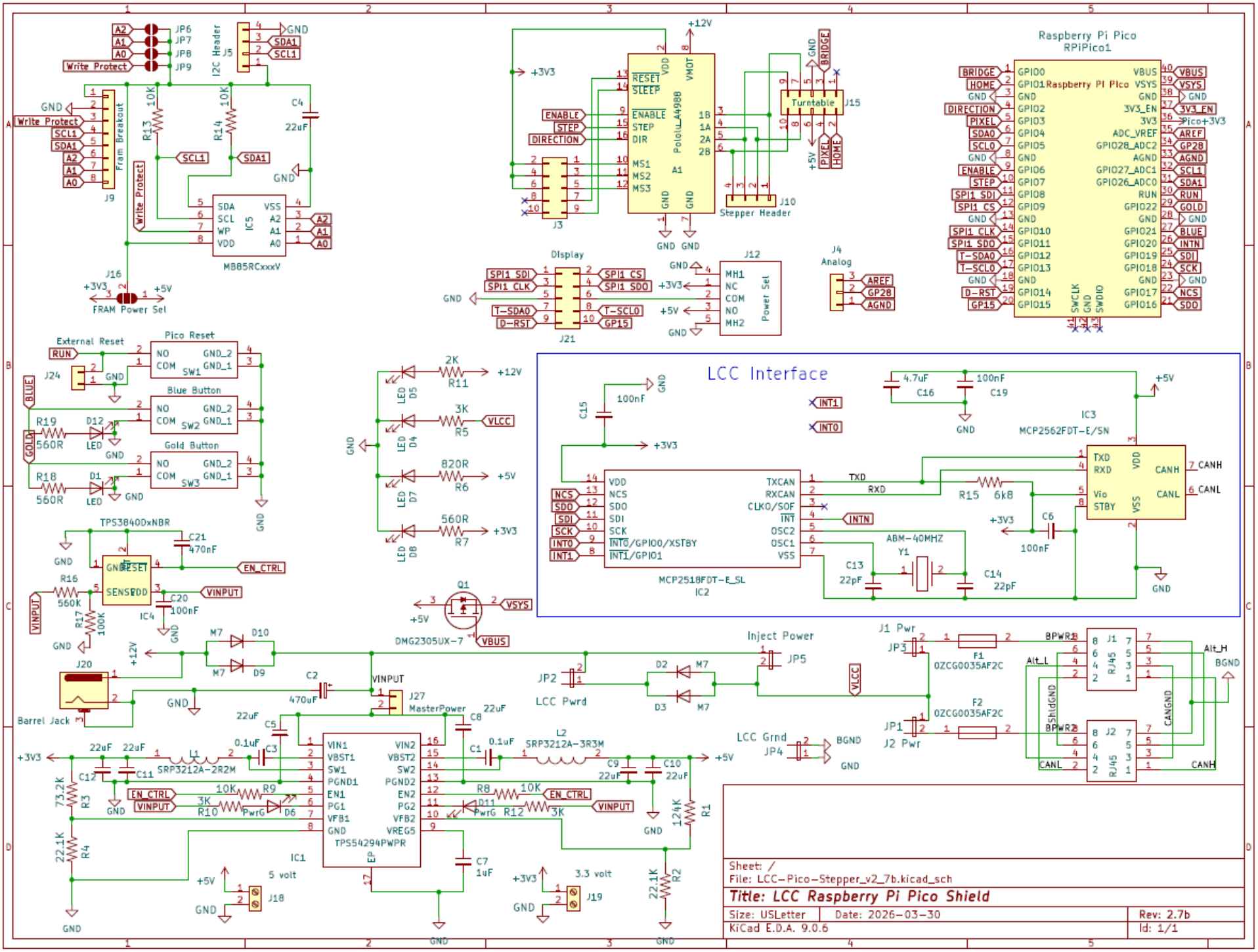
Raspberry Pi Pico
RPiPico1
Raspberry Pi Pico
LCC Interface
MB85RCxxxV
FRAM Power Sel
Stepper Header
Turntable
Display
Power Sel
Analog
External Reset
Pico Reset
Blue Button
Gold Button
TPS3840DxNBR
MCP2562FDT-E/SN
MCP2518FDT-E_SL
DMG2305UX-7
Barrel Jack
MasterPower
Inject Power
LCC Pwrd
LCC Grnd
J1 Pwr
J2 Pwr
TPS54294PWPR
5 volt
3.3 volt
Sheet: /
File: LCC-Pico-Stepper_v2_7b.kicad_sch
Title: LCC Raspberry Pi Pico Shield
Size: USLetter
Date: 2026-03-30
Rev: 2.7b
KiCad E.D.A. 9.0.6
Id: 1/1